REVISIONS			
REV.	DESCRIPTION	DATE	ENG
A	INITIAL RELEASE	03/21/2024	CWA

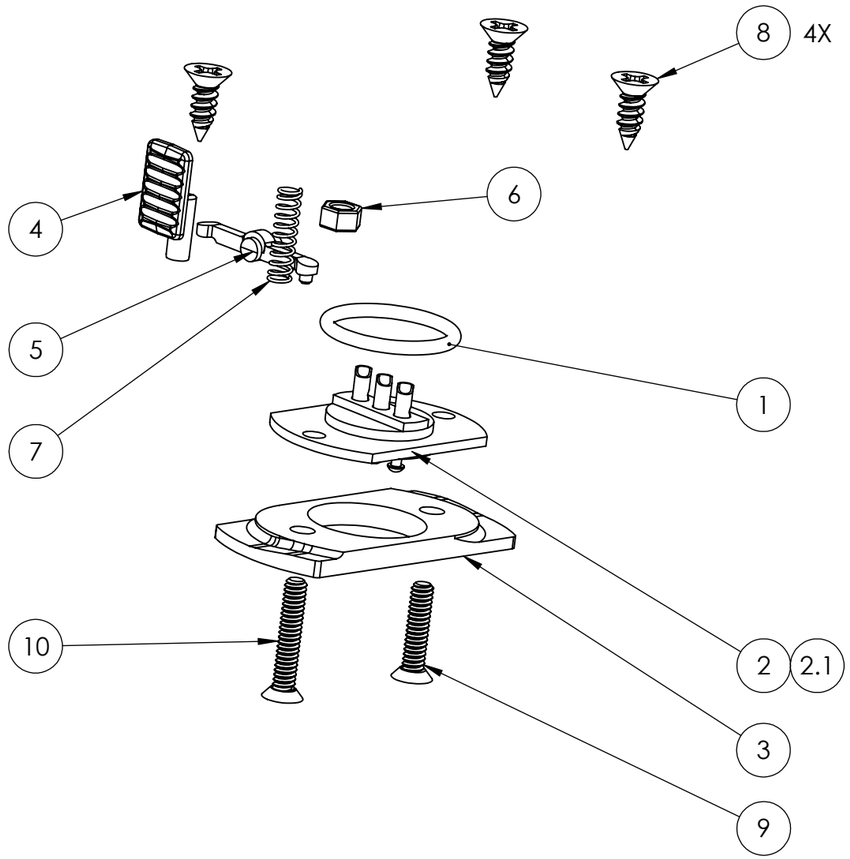

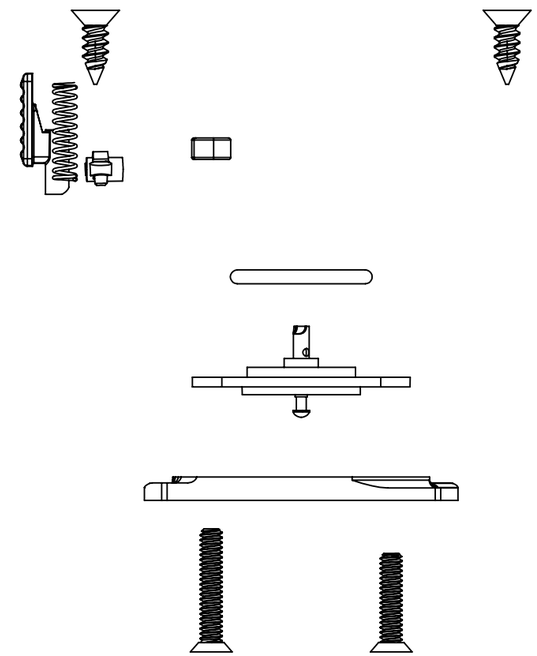

1116-01-105-ASSY (PIN ASSEMBLY)

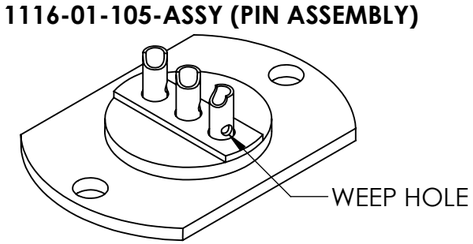

BILL OF MATERIALS			
ITEM NO.	PART NO.	QTY	NAME/DESCRIPTION
1	571-063-R70BT	1	RED TEFLON COATED BUNA O-RING
2	1116-01-105-ASSY	1	3 POGO PIN ASSEMBLY REV. E
2.1	500626-00C	3	DOME TOP POGO PINS
3	1116-01-106	1	GROUND BAR, SS316, NICKEL PLATED
4	1116-01-103	1	THUMB LOCK REV. B
5	1116-01-104	1	ROCKER ARM
6	90730A005	1	4-40 HEX NUT
7	C0120-014-0500-M	1	SPRING
8	90033A150	4	#6 X 1/2" FLAT HEAD SCREW, PHILIPS DRIVE
9	91099A167	1	4-40 X 1/2" SCREW, 18-8 SS. FLATHEAD PHILIPS
10	91099A169	1	4-40 X 5/8" SCREW, 18-8 SS. FLATHEAD PHILIPS

NOTES:

1. PACKAGING REQUIREMENTS:
   - A. EACH COMPLETED ASSEMBLY SHALL BE PACKAGED IN A ZIP POLYBAG.
   - B. CONNECTOR(S) SHALL BE PACKAGED TO PREVENT DAMAGE DURING SHIPPING. BUBBLE WRAP OR PROTECTIVE COVER MUST BE USED.
   - C. POLYBAG SHALL BE MARKED WITH SUPPLYNET LOGO, PRODUCT QR CODE, PART NUMBER, CAGE CODE, AND LOT NO, PER SN-STD-LBL REQUIREMENTS.
2. ALL ITEMS MUST BE HANDLED WITH CARE AND SHOULD BE FREE FROM ANY SCRATCHES, CHIPS, OR DEFECTS.

REF. NUMBER: SN1150

UNLESS OTHERWISE SPECIFIED:

DIMENSIONS ARE IN: INCHES
TOLERANCES: .XX: ± 0.03
.XXX: ± 0.005
ANGULAR: .X°: 1°
.XX°: 0.5°
BREAK EDGES: .005 - .020
FILLETS: .005 - .020
SUFACE FINISH:

GEOMETRIC TOLERANCING PER: ASME Y14.5 -2009

MATERIAL: SEE DRAWING NOTES

FINISH: SEE DRAWING NOTES

DO NOT SCALE DRAWING

	NAME	DATE
DRAWN	CWA	03/21/2024
CHECKED	MOB	03/21/2024
COMMENTS:		

PROPRIETARY AND CONFIDENTIAL
THE INFORMATION CONTAINED IN THIS DRAWING IS THE SOLE PROPERTY OF SUPPLYNET, INC. ANY REPRODUCTION IN PART OR AS A WHOLE WITHOUT THE WRITTEN PERMISSION OF SUPPLYNET INC. IS PROHIBITED.

CAGE CODE: 1HJX9

SupplyNet DESIGN ENGINEERING MANUFACTURING

TITLE:

AN/PRC-148/PRC-152 BATTERY ADAPTOR KIT

SIZE	DWG. NO.	REV
B	SN-799-KIT-C	A

SCALE: NA | WEIGHT: | SHEET 1 OF 1