REVISIONS			
REV.	DESCRIPTION	DATE	ENG
E	ITEM NO. 2 CHANGED	10/31/2023	CWA
F	ITEM NO. 2 CHANGED	08/21/2025	CWA
G	UPDATED BOM; ITEM NO. 3	03/03/2026	CWA

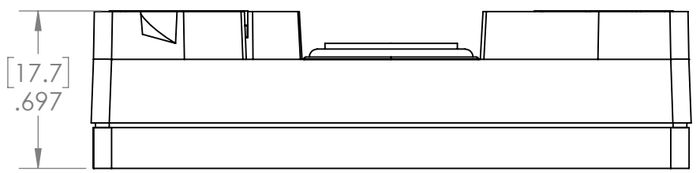

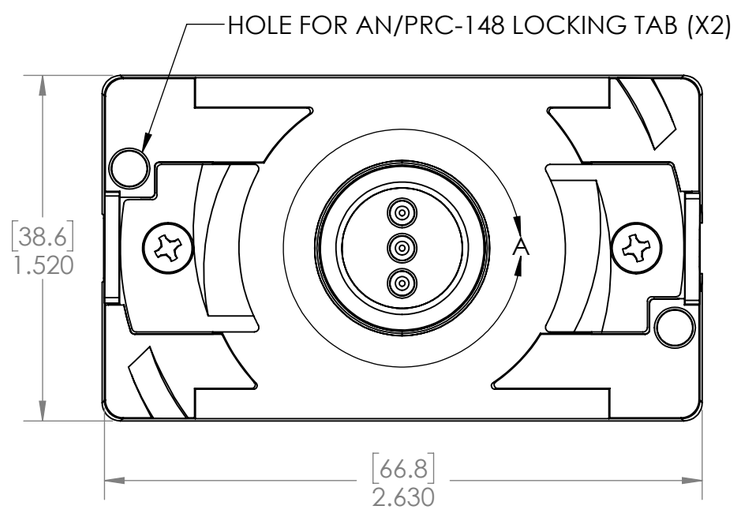

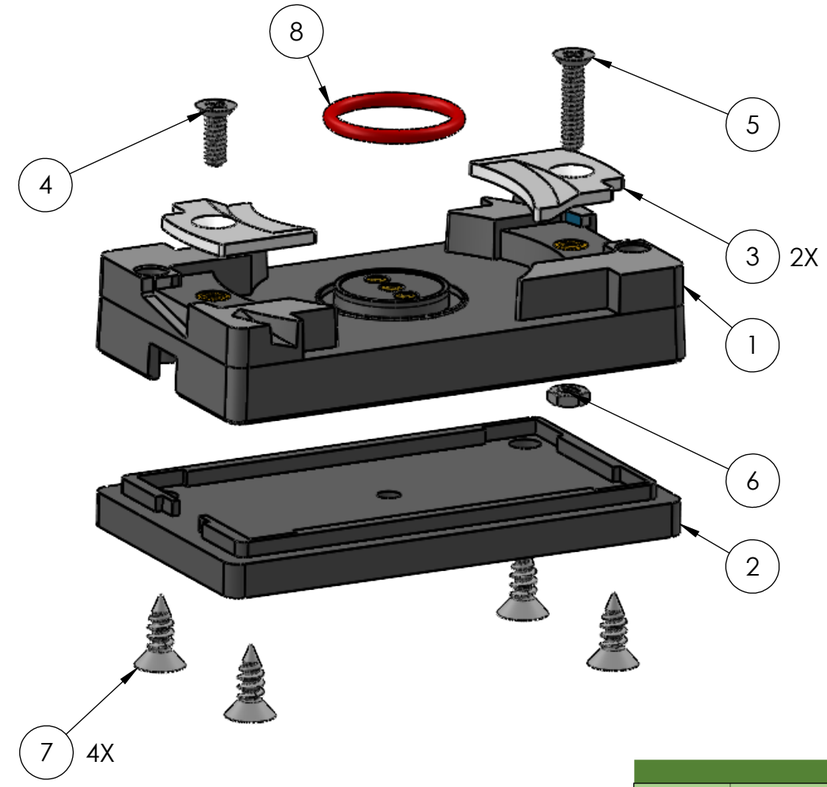

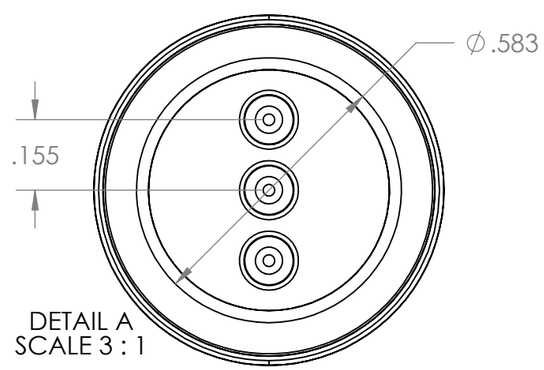

DETAIL A
SCALE 3 : 1

BILL OF MATERIALS			
ITEM NO.	PART NO.	QTY	NAME/DESCRIPTION
1	FE-411-02A2	1	CONNECTOR HOUSING
2	FE-411-02B	1	HOUSING BACK COVER
3	STEEL-TAB-SILVUS	2	GND TABS REV. F
4	67566521 / OR EQUIV.	1	18-8 SS, PHILLIPS FLAT HEAD SCREW,4-40 x 3/8"
5	91099A167 / OR EQUIV.	1	18-8 SS, PHILLIPS FLAT HEAD SCREW, 4-40 x 1/2"
6	90730A005 / OR EQUIV.	1	4-40 HEX NUT
7	90033A150 / OR EQUIV.	4	PHILLIPS FLAT HEAD SCREW, ZINC PLATED, #6 x 1/2"
8	571-063-R70BT	1	RED BUNA-N O-RING TEFLON COATED

NOTES:
1. PARTS SHALL BE PACKAGED TOGETHER AS AN UNASSEMBLED KIT.
2. IDENTIFICATION: BAG AND IDENTIFY ON THE PACKAGING THE FOLLOWING INFORMATION FOR EACH PART DELIVERED.
   PN: CONN-MBITR-KIT REV. X (REV MARKING PER PO)
   CAGE CODE: 1HJX9
   LOT: TYYYYMMDDPXXXXX

REF. NUMBER: SN0256

UNLESS OTHERWISE SPECIFIED:		NAME	DATE
DIMENSIONS ARE IN: INCHES TOLERANCES: .XX: ± 0.03 .XXX: ± 0.005 ANGULAR: .X°: 1° .XX°: 0.5° BREAK EDGES: .005 - .020 FILLETS: .005 - .020 SUFACE FINISH:	DRAWN	LS	10/03/17
	CHECKED	RB	10/03/17
	COMMENTS:		
GEOMETRIC TOLERANCING PER: ASME Y14.5 -2009	**PROPRIETARY AND CONFIDENTIAL** THE INFORMATION CONTAINED IN THIS DRAWING IS THE SOLE PROPERTY OF SUPPLYNET, INC. ANY REPRODUCTION IN PART OR AS A WHOLE WITHOUT THE WRITTEN PERMISSION OF SUPPLYNET INC. IS PROHIBITED.		
MATERIAL: SEE DRAWING NOTES			
FINISH: SEE DRAWING NOTES			
DO NOT SCALE DRAWING	**CAGE CODE: 1HJX9**		

SupplyNet DESIGN ENGINEERING MANUFACTURING

TITLE:
AN/PRC-148, AN/PRC-152 BATTERY ELIMINATOR CONNECTOR KIT

SIZE	DWG. NO.	REV
B	**CONN-MBITR-KIT**	**G**

SCALE: NA | WEIGHT: | SHEET 1 OF 1